4K Monitor Rack Mount (22" and 24")

SMALLHD

Rack Mount for 22-24″ Monitors

QUICK START GUIDE

Physical Properties

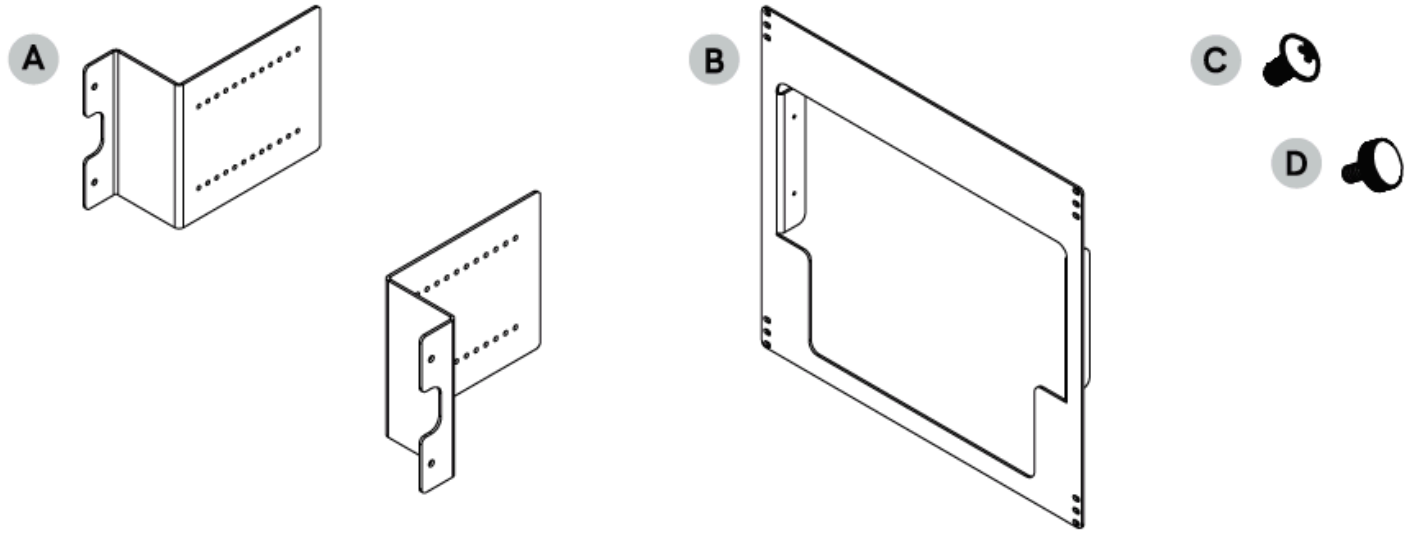

A. 2x Bracket Arms

B. 1x Rack Bracket

C. 4x Screw, Wide Truss Head (10-32, 3/8”)

D. 4x Thumbscrew, Knurled Head 0.27in DIA, Black(1/4”-20 x 7/16”)

Assembled View

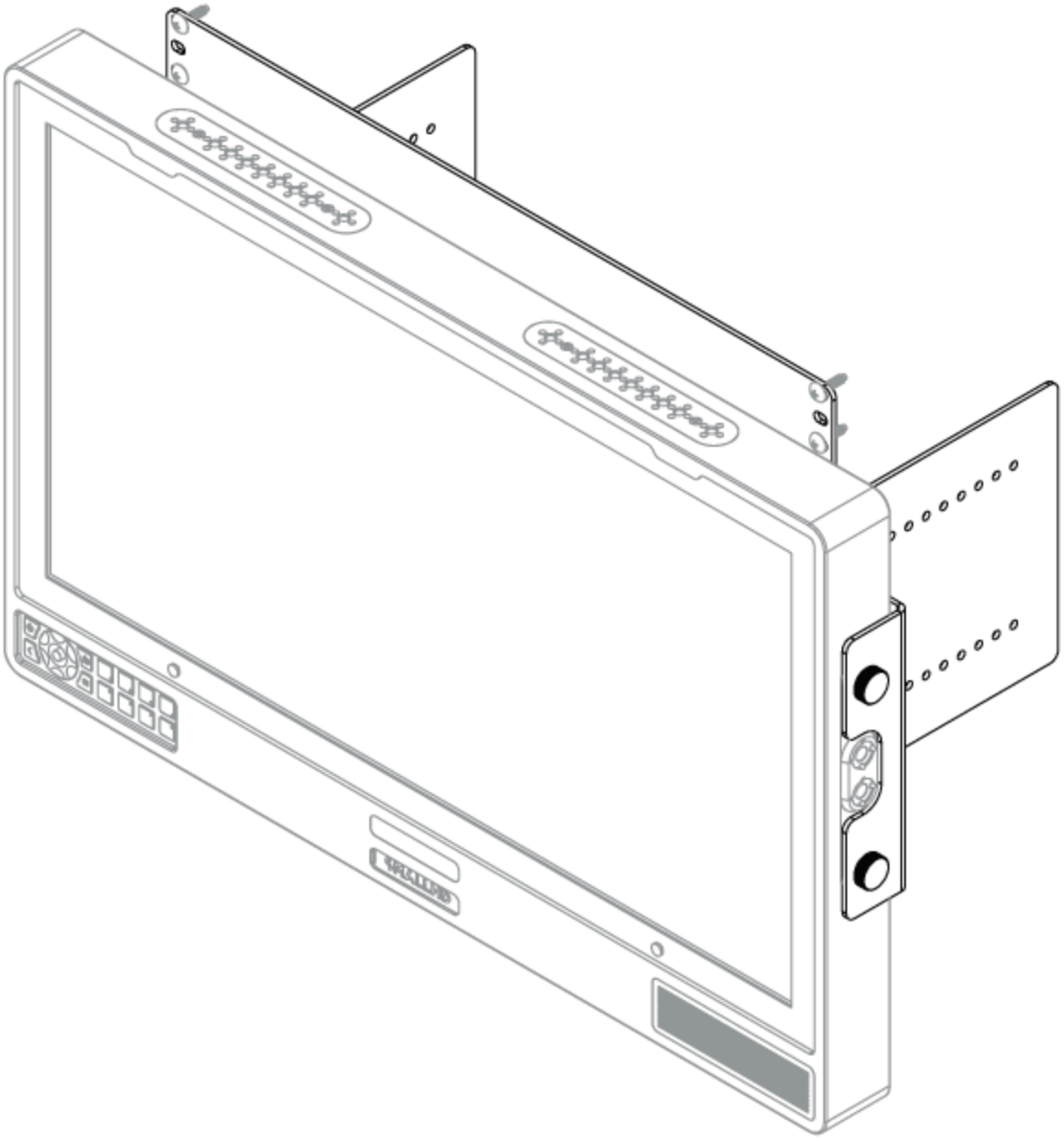

NOTE:

- Monitor not included.
- Before Installing your Rack Mount, please remove your handle and feet from the monitor.

Installation

1. Attach Bracket Arms to Rack Bracket with included 10/32 screws. Select your Bracket Arm holes based on how deep you want your monitor in the rack. Make sure you choose the same hole depth on each Bracket Arm.

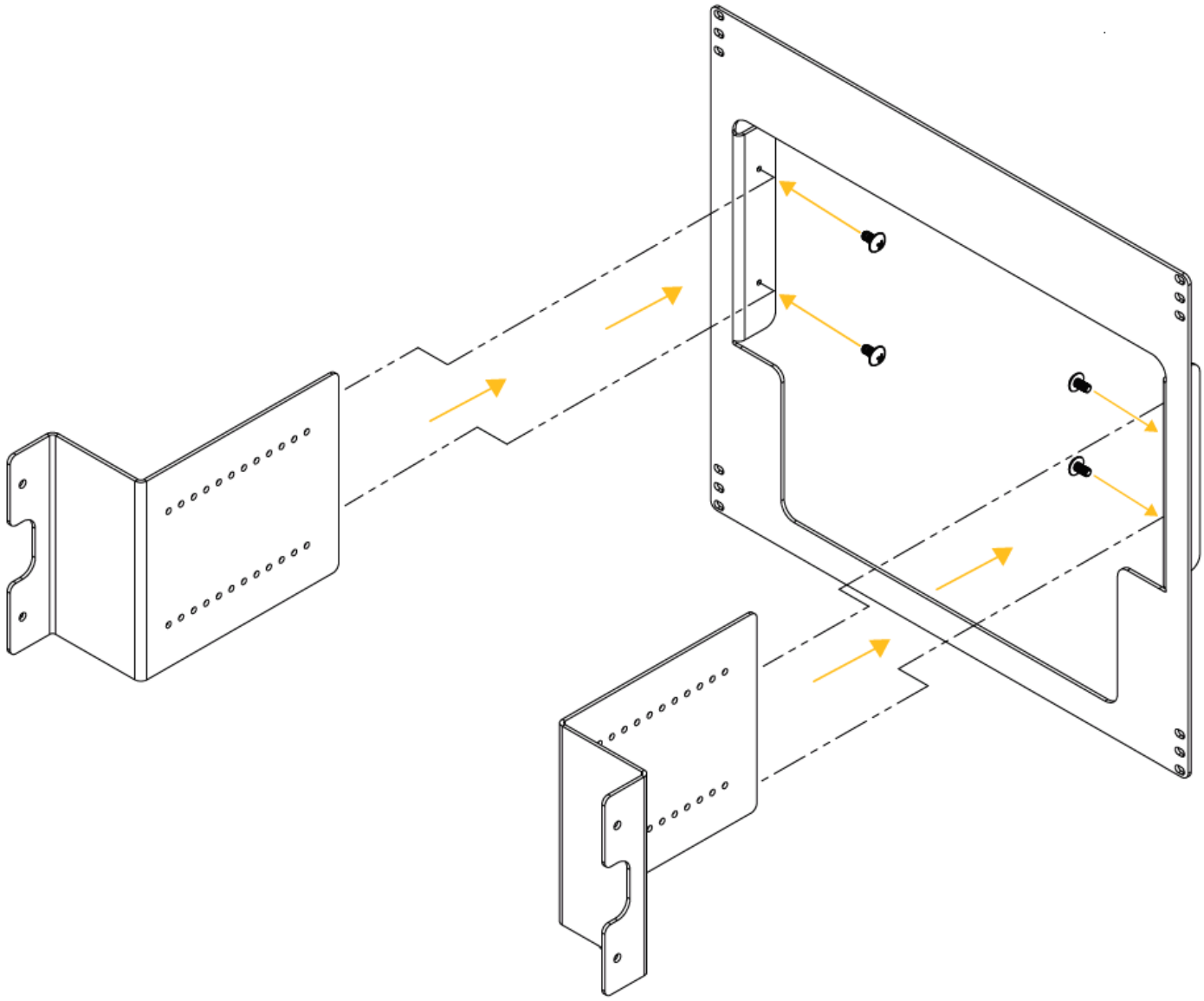

2. Attach Rack Bracket (with Bracket Arms already attached) to your rack system using the screws provided with your rack system (they are not included with this kit since these vary by manufacturer).

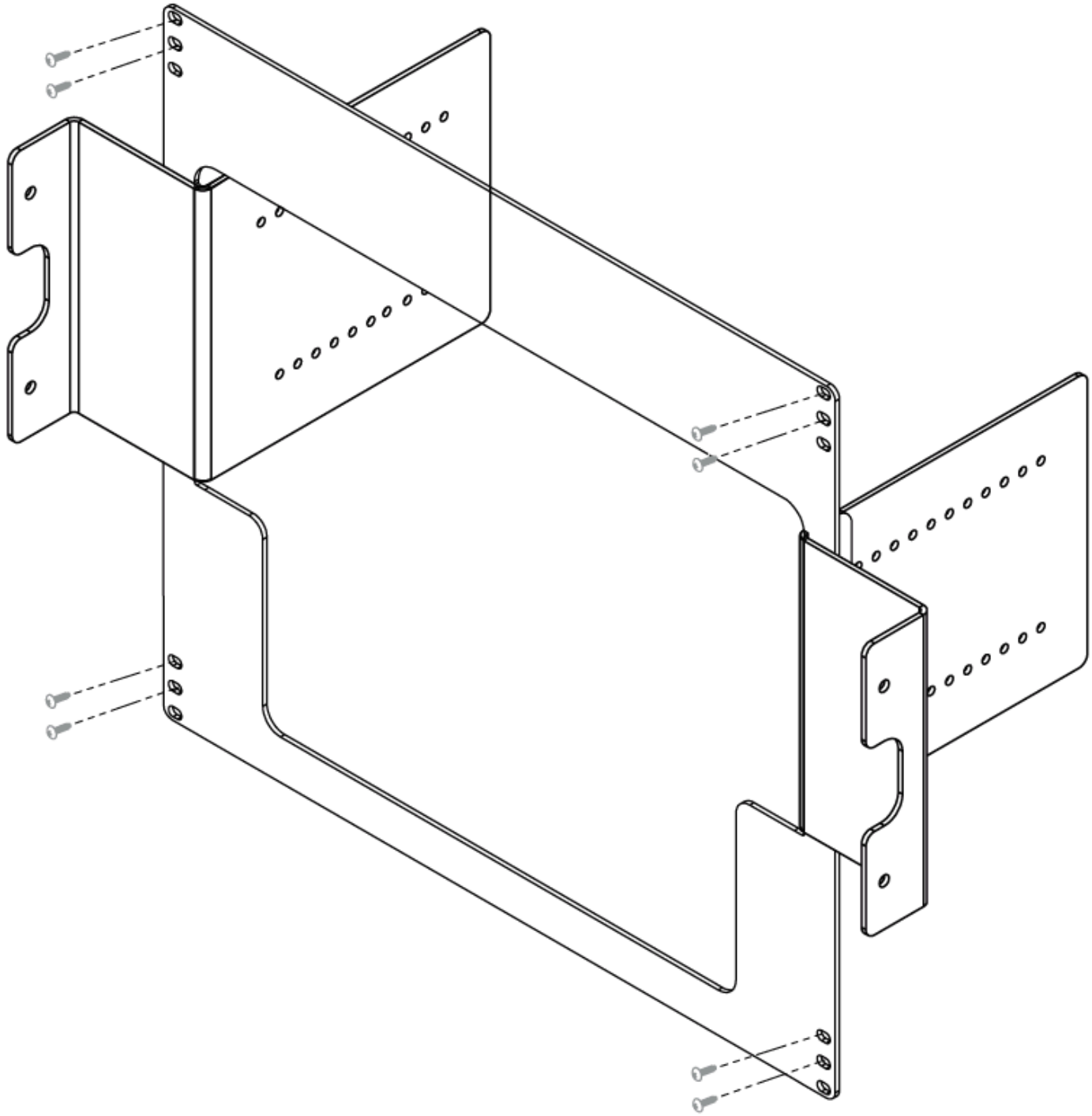
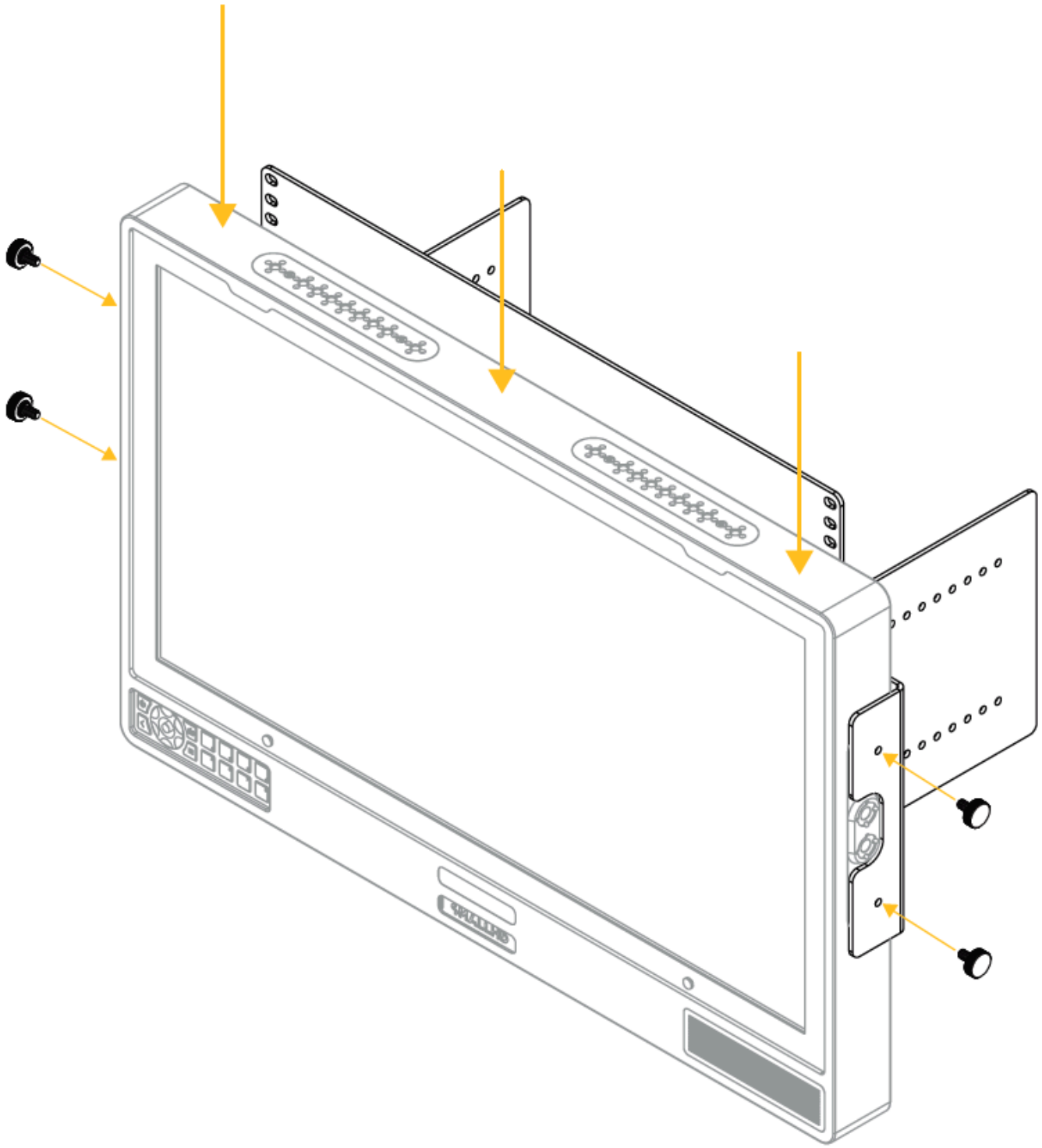
3. Slide monitor in between the Bracket Arms and attach with the four included thumbscrews